SBF FRONT RUNNER DIPSTICK INSTALLATION

DIPSTICK INSTALLATION

- ☐ REMOVE PLUG FROM DIPSTICK MOUNTING LOCATION.
  NOTE: DISCARD PLUG, KEEP RETAINING CLIP AND MOUNTING SCREW

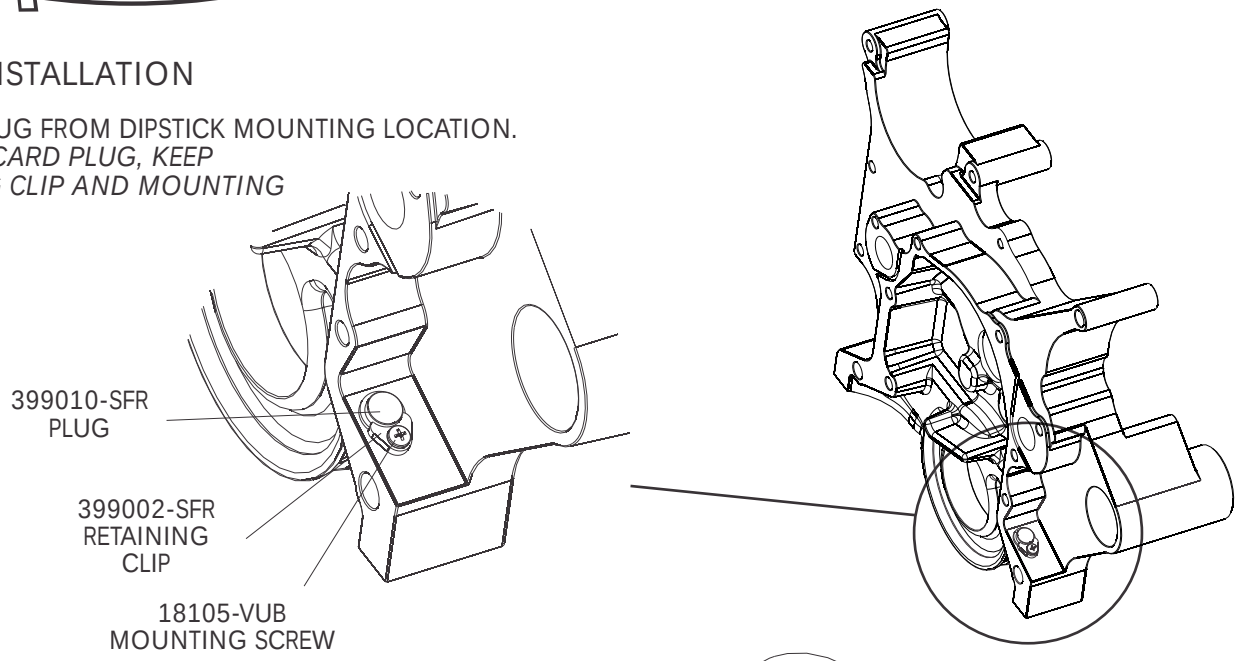

- ☐ USING AN APPROPRIATE LUBRICANT, LUBRICATE O-RING AND INSTALL O-RING ON DIPSTICK TUBE AS SHOWN.
- ☐ USING RETAINING CLIP AND MOUNTING SCREW, INSTALL DIPSTICK TUBE AS SHOWN.
- ☐ UPON COMPLETION OF FRONT RUNNER INSTALLATION INSTALL DIPSTICK.

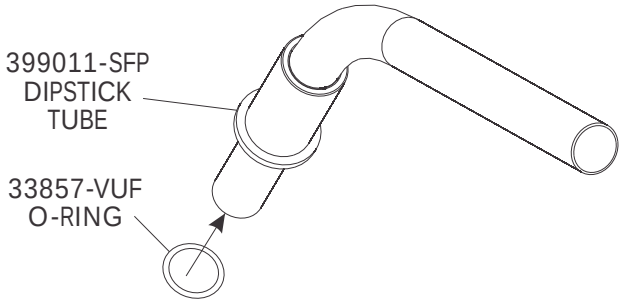

** PERFORM FRESH OIL CHANGE, FILL WITH APPROPRIATE QUANTITY OF OIL, AND VERIFY DIPSTICK ADJUSTMENT.*

SBF FRONT RUNNER
DIPSTICK PACKING LIST

DIPSTICK KIT
399009-SFA

No.	QTY.	PART No.	DESCRIPTION	
1.	1	399011-SFP	DIPSTICK TUBE	_____
2.	1	399008-SFA	DIPSTICK	_____
3.	1	33857-VUF	#6 O-RING	_____
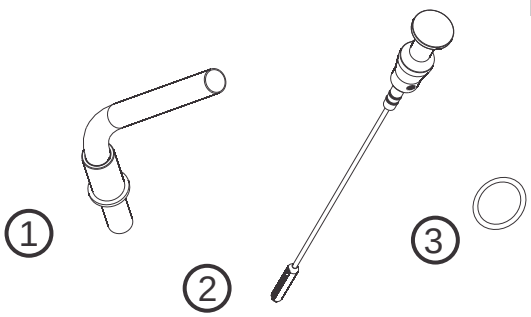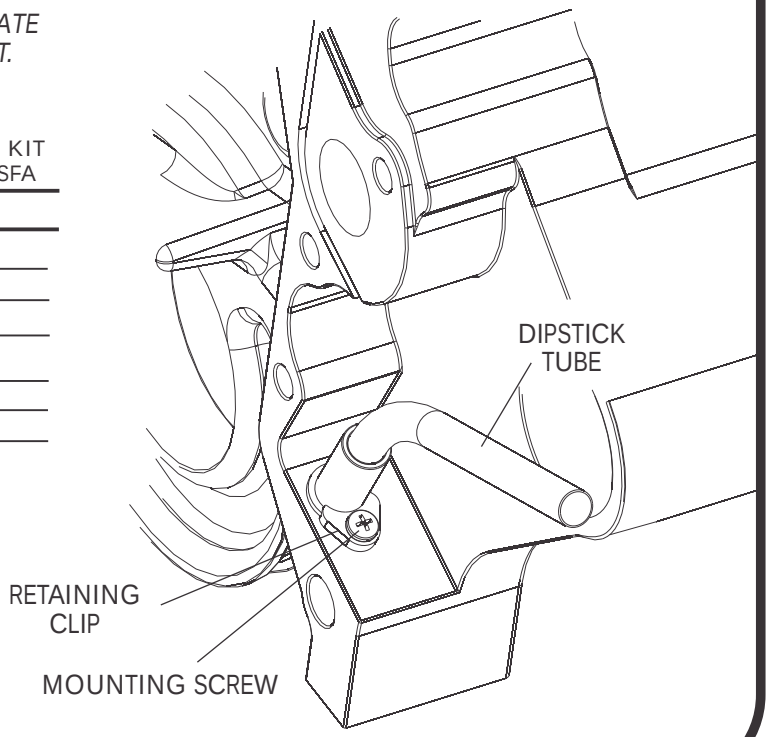
CHECKED BY: _____
PACKED BY: _____
DATE: _____